पावर ग्रिड कॉर्पोरेशन ऑफ इंडिया लिमिटेड
(भारत सरकार का उद्यम)
POWER GRID CORPORATION OF INDIA LIMITED
(A Government of India Enterprise)

संदर्भ/Ref : CC-ENGG-CS0PKG19-1001307-SC0061-FDN PT **Date :** 25/03/2022

From : Vetcha Raja
Senior GM

To : M/s Tata Projects Limited
1st Floor, Tower-1, Okaya Center, B-5
Sector-62
Noida-201301, Uttar Pradesh

Cc : RHQ Shillong

Subject : ARP DMS 04
LOA Ref : ARP DMS 04 dtd 14-12-2020 Dated 14/12/2020

Please find enclosed following drawings/ documents for necessary action at your end.

Vendor Drg. No.	:	TPL-200250-CHA-CL-1113
Orgn. Drg. No.	:	CS0PKG19-1001307-SC0061-FDN PT
Revision No.	:	00
Drg. Title	:	Changlang-Design and Drawing of 33 KV PT Foundation.
App. Category	:	CAT-I
Release Date	:	25/03/2022

Scan to verfiy

Comments : checked and found in order

अनुमोदित श्रेणी/App. Category:

I. फेब्रिकेशन/निर्माण/टाइप टेस्टिंग हेतु जारी।
Approved/released for fabrication/construction.

II. फेब्रिकेशन/निर्माण/टाइप टेस्टिंग हेतु अनुमोदित/जारी बशर्ते दिए गए टिप्पणियाँ एवं आशोधनों की सम्मिलित किया जाये। कृपया रिवाइजड दस्तावेज अनुमोदनार्थ प्रस्तुत करें।
Approved/released for fabrication/ construction subject to incorporation of comments and modification as noted. Revised drawing required for approval.

III. टिप्पणियाँ सम्मिलित करने के उपरांत दस्तावेज को अनुमोदनार्थ प्रस्तुत करें।
To be resubmitted for approval after incorporating the comments.

IV. सूचनार्थ एवं रिकार्ड हेतु।
For information and record.

REL-CON निर्माण हेतु जारी।
Released for construction.

नोट/Note:

1. Approval/Comments conveyed herein neither relieve the contractor of his contractual obligations and his responsibilities, weights, quantities, design details assemble fits, performance particulars and conformity of the supplies with the Indian Statutory Laws as may be applicable, nor does it limits the purchaser's right under the contract.
2. The approval conveyed vide this letter does not cover the approval of make for sub-vendor items.

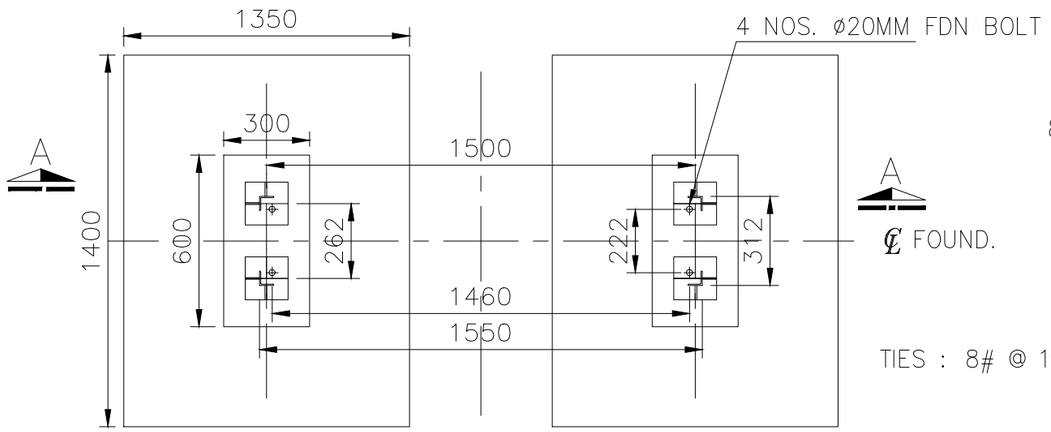

PLAN
FOUNDATION DETAIL

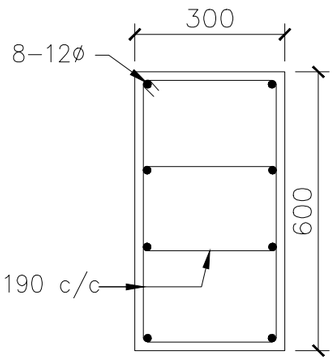

SECTION B–B

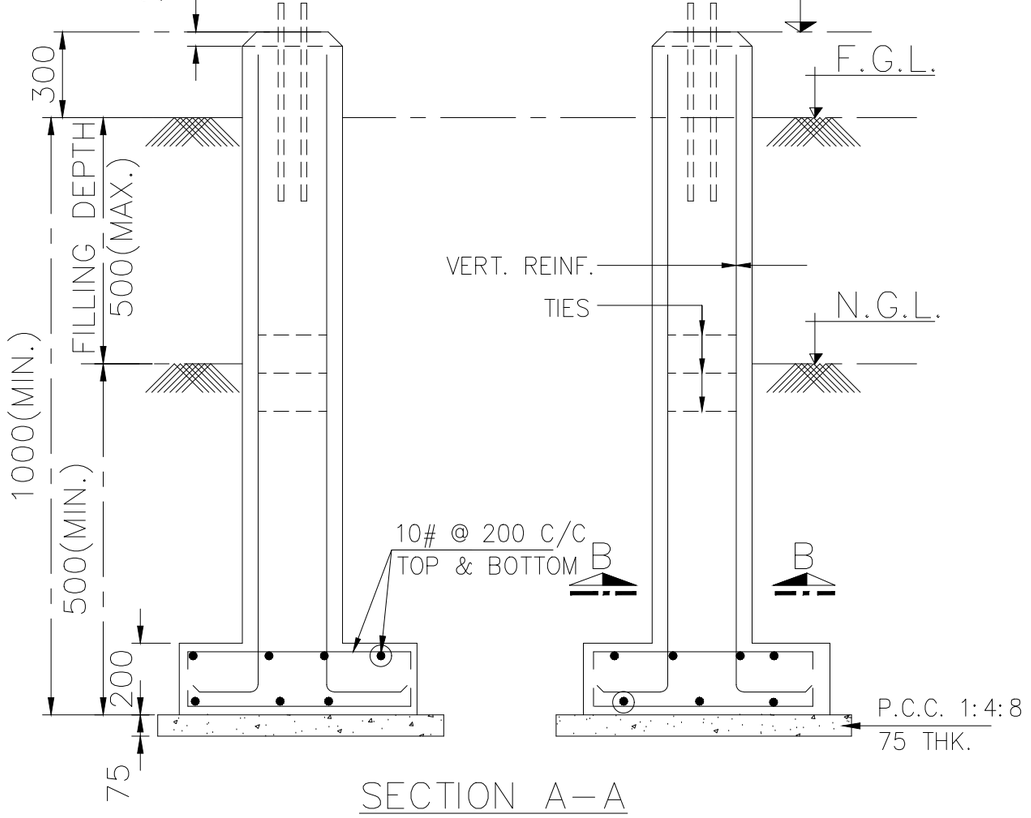

SECTION A–A

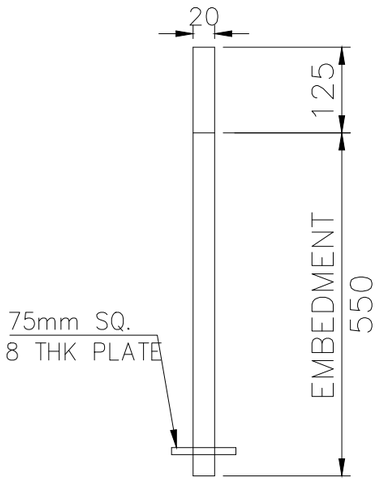

DET. OF FOUNDATION BOLT

GENERAL NOTES :–

1. ALL DIMENSIONS ARE IN MM & LEVELS ARE IN MM.
2. DO NOT SCALE THE DRAWING. ONLY WRITTEN DIMENSIONS SHALL BE FOLLOWED.
3. IN THIS DRAWING: # DENOTES HYSD STEEL OF GRADE OF Fe415 CONFORMING TO I.S.1786
4. GRADATION OF AGGREGATES SHALL BE AS PER RELEVANT IS CODES.
5. PROVIDE CLEAR COVER TO REINFORCEMENT AS UNDER.
   * 50mm FOR BOTTOM & TOP REINFORCEMENT OF RAFT.
   * 50mm FOR SIDE REINFORCEMENT OF RAFT.
   * 50mm FOR COLUMN/PEDESTAL
   * 50mm FOR SOAK PIT WALL ON EARTH SIDE AND 25MM ON GRAVEL SIDE
6. UNLESS OTHERWISE NOTED ALL CONCRETE SHALL BE OF GRADE M–20.
7. ARRANGEMENT OF FOUNDATION BOLT SHALL BE VERIFIED WITH STRUCTURE DRG. BEFORE CASTING THE FOUNDATION.
8. LEVELING COURSE PCC SHALL BE OF NOMINAL MIX 1:4:8.
9. THE FOUNDATION HAS BEEN DESIGNED FOR NET SAFE BEARING CAPACITY OF 4.670 t/m AT 0.50M DEPTH FROM NGL.
10. FOR LOCATION AND ORIENTATION OF FOUNDATION, REFER RESPECTIVE FOUNDATION LAYOUT
11. BACKFILLING OF SOIL OVER FOOTING SHALL BE DONE WITH SELECTED GOOD EARTH IN LAYER NOT EXCEEDING 200mm THICK TO ACHIEVE PROCTOR DENSITY OF AT LEAST 95%.

APPROVED

REV.	DATE	DESCRIPTION	DRAWN BY.	CHKD BY.	APPD BY
R0	02.03.2022	FOR APPROVAL	EDPPL	P.S.	V.V.S.
LOA NO.		CC–CS/1038–NER/REW–4151/3/G2/NOA–I/9086 Dtd. 14–12–2020 CC–CS/1038–NER/REW–4151/3/G2/NOA–II/9087 Dtd. 14–12–2020			
OWNER		DEPARTMENT OF POWER GOVT. OF ARUNACHAL PRADESH			
CLIENT		POWER GRID CORPORATION OF INDIA LIMITED			
CONTRACTOR		**TATA PROJECTS LIMITED** 1st FLOOR, TOWER–1 OKAYA CENTER, B–5, SECTOR–62 NOIDA–201301, U.P.			
PROJECT.		BALANCE WORK OF PACKAGE–ARP–DMS–04 UNDER COMPREHENSIVE SCHEMES FOR STRENGTHENING OF TRANSMISSION & DISTRIBUTION SYSTEM IN ARUNACHAL PRADESH.			
DESCRIPTION		**FOUNDATION DETAILS OF 33 kV PT FOR 33/11 kV SUB STATION AT CHANGLANG**			
SCALE – 1:1		DRAWING No. TPL–200250–CHA–CL–1113	REV.–0	SHEET – 1 OF 1	